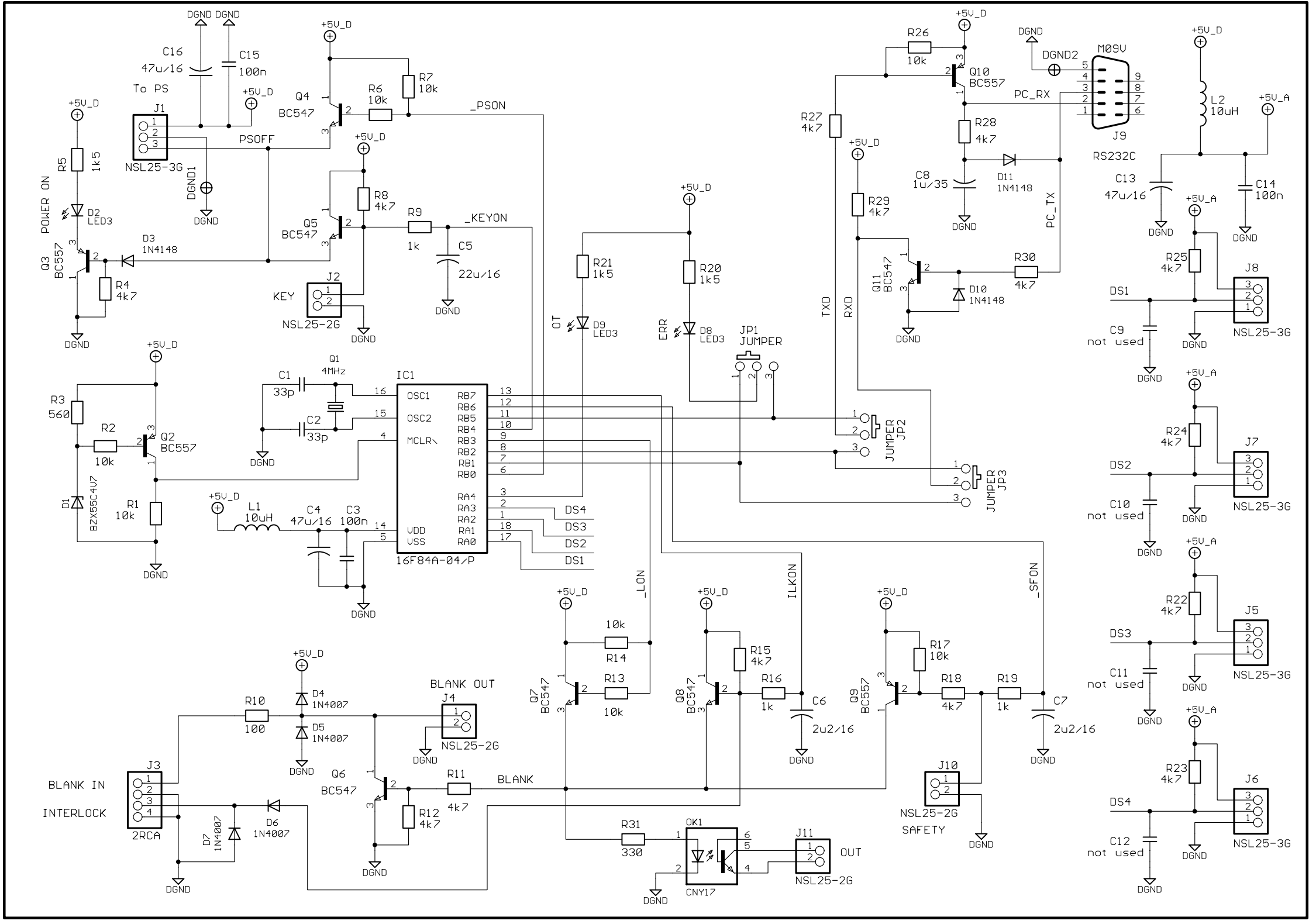
DGND
DGND2
DGND1
+5V_D
+5V_A
C16
47u/16
C15
100n
To PS
J1
NSL25-3G
PSOFF
Q4
BC547
R6
10k
R7
10k
_PSON
R5
1k5
POWER ON
D2
LED3
Q3
BC557
D3
1N4148
R4
4k7
R8
4k7
Q5
BC547
R9
1k
_KEYON
C5
22u/16
J2
KEY
NSL25-2G
R21
1k5
OT
D9
LED3
R20
1k5
ERR
D8
LED3
JP1
JUMPER
R26
10k
Q10
BC557
PC_RX
R27
4k7
R28
4k7
C8
1u/35
D11
1N4148
PC_TX
R29
4k7
Q11
BC547
R30
4k7
D10
1N4148
TXD
RXD
M09V
J9
RS232C
L2
10uH
C13
47u/16
C14
100n
R25
4k7
J8
DS1
C9
not used
R24
4k7
J7
DS2
C10
not used
R22
4k7
J5
DS3
C11
not used
R23
4k7
J6
DS4
C12
not used
NSL25-3G
JUMPER
JP2
JUMPER
JP3
R3
560
R2
10k
Q2
BC557
D1
BZX55C4V7
R1
10k
Q1
4MHz
C1
33p
C2
33p
IC1
OSC1
OSC2
MCLR
RB7
RB6
RB5
RB4
RB3
RB2
RB1
RB0
RA4
RA3
RA2
RA1
RA0
VDD
VSS
16F84A-04/P
L1
10uH
C4
47u/16
C3
100n
_LON
ILKON
_SFON
R14
10k
R13
10k
Q7
BC547
R15
4k7
R16
1k
Q8
BC547
C6
2u2/16
R17
10k
R18
4k7
R19
1k
Q9
BC557
C7
2u2/16
J10
NSL25-2G
SAFETY
BLANK OUT
J4
NSL25-2G
R10
100
D4
1N4007
D5
1N4007
J3
BLANK IN
INTERLOCK
2RCA
D7
1N4007
D6
1N4007
Q6
BC547
R11
4k7
BLANK
R12
4k7
R31
330
OK1
CNY17
J11
OUT
NSL25-2G