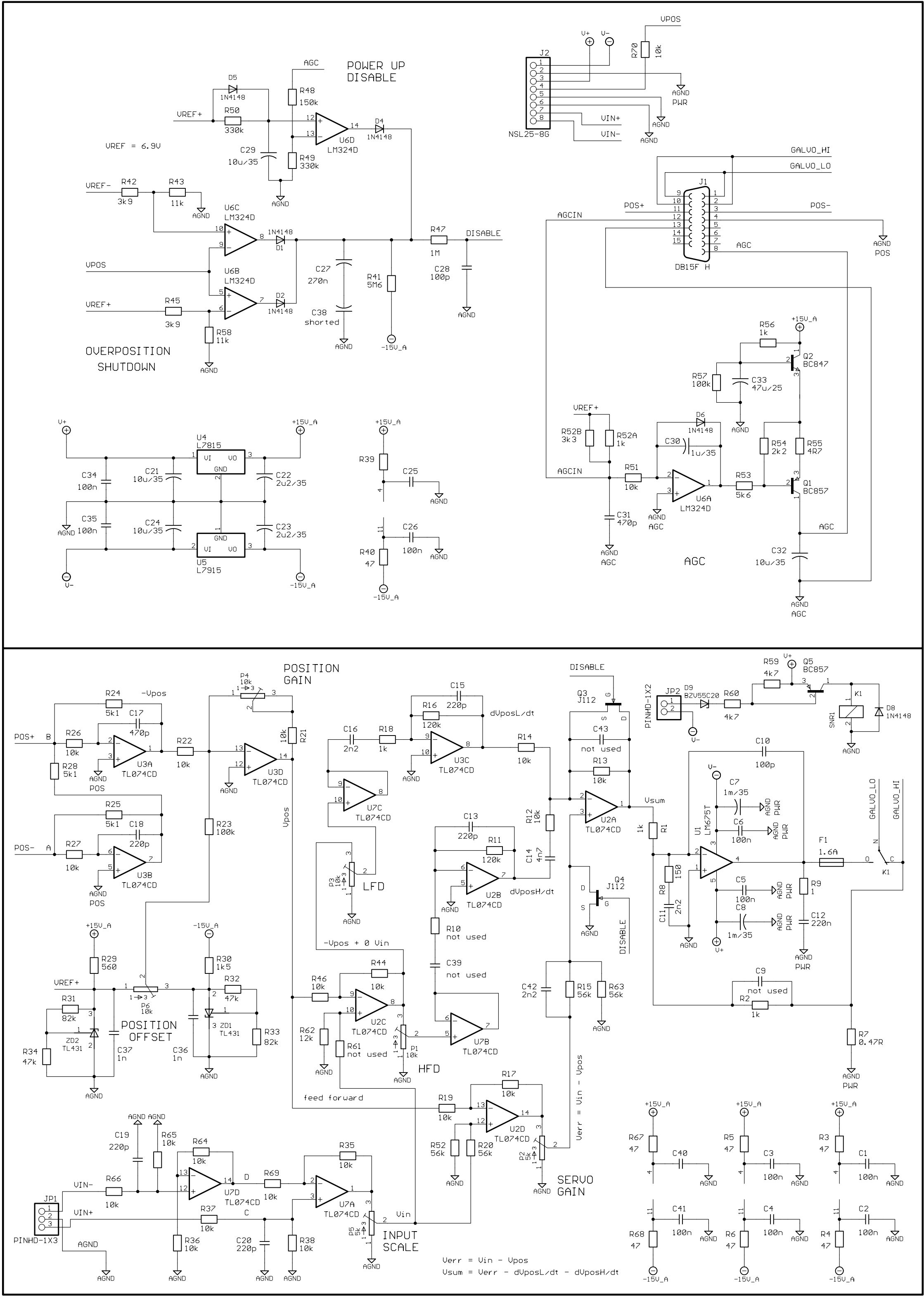
POWER UP DISABLE
VREF = 6.9V
OVERPOSITION SHUTDOWN
U6C LM324D
U6B LM324D
U6D LM324D
DISABLE
J2
NSL25-8G
VIN+
VIN-
VPOS
AGND PWR
J1
DB15F H
GALVO_HI
GALVO_LO
POS+
POS-
AGCIN
AGC
AGND POS
U4 L7815
U5 L7915
+15V_A
-15V_A
AGC
POSITION GAIN
U3A TL074CD
U3B TL074CD
U3C TL074CD
U3D TL074CD
U7C TL074CD
U2A TL074CD
U2B TL074CD
U2C TL074CD
U7B TL074CD
U7D TL074CD
U7A TL074CD
U2D TL074CD
U1 LM675T
Q1 BC857
Q2 BC847
Q3 J112
Q4 J112
Q5 BC857
JP2 PINHD-1X2
JP1 PINHD-1X3
K1 SNR1
F1 1.6A
LFD
HFD
POSITION OFFSET
SERVO GAIN
INPUT SCALE
dVposL/dt
dVposH/dt
Vsum
Vpos
Vin
Verr = Vin - Vpos
feed forward
-Vpos + 0 Vin
not used
Verr = Vin - Vpos
Vsum = Verr - dVposL/dt - dVposH/dt